Koroseal Wall Protection Systems
C860 Crash Rail
Installation Instructions

1. Locate and install **KOROGARD®** Crash Rail in accordance with architectural drawings and specifications. When required, **KOROGARD** shop drawings should be used in conjunction with these documents.
2. Lay out the work to be completed, including all component parts, along the base of the wall. Check the material for any damage that may have occurred during shipment and/or handling at the job site.
3. Snap a chalk line at the proper location on the wall to ensure a level installation. Chalk line should be calculated to the center line of the mounting bracket wall fasteners.
4. Place the ends in the proper location and fasten to wall with proper fasteners (not included).
5. Attach wall brackets in proper locations not to exceed 16" (406.4mm) on center, using proper wall fasteners (not included).

   NOTE: Prior to installation of the KOROGARD cover, make sure that all fasteners are secure and properly seated.
6. Hold the **KOROGARD** cover at an angle and place the top of the cover behind the top of the brackets. Make sure that the cover is placed in the proper position and snap-fit the **KOROGARD** cover onto the wall brackets by placing hands downward and applying pressure with the heel of each hand to force the cover onto the brackets. Continue along until the complete length of the cover is securely installed.
7. If you have any questions during installation, please call your local **KOROGARD** representative.

   NOTE: If the KOROGARD cover has been supplied in stock lengths, it will be necessary for it to be field-cut. Determine the distance from inside cap to inside cap. It is recommended that the KOROGARD cover be cut slightly oversize to provide proper alignment between the end caps.

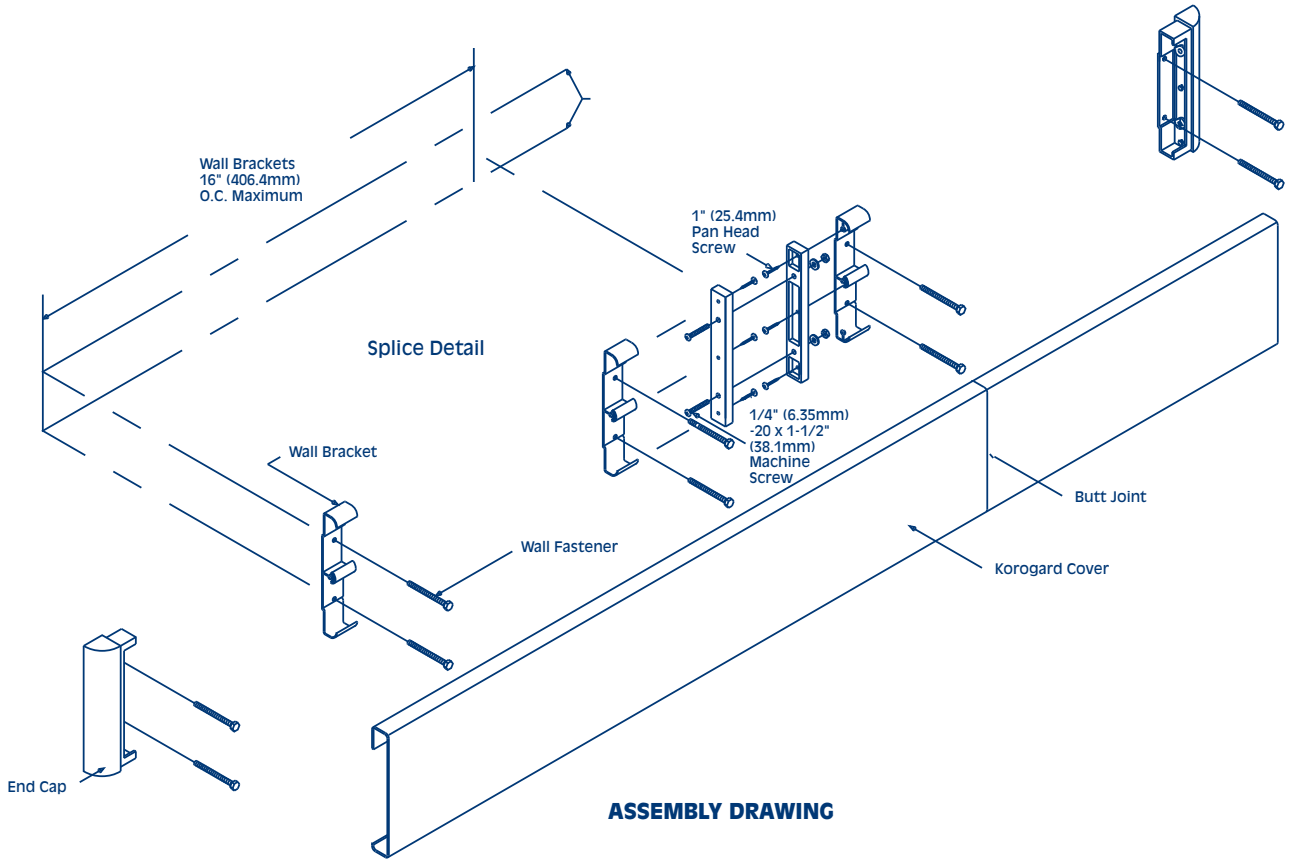

ASSEMBLY DRAWING

Installation Dimensions for C860 Crash Rail

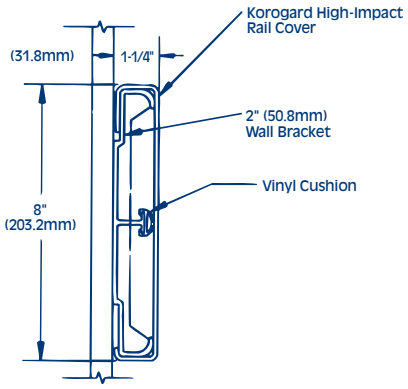

MODEL C860

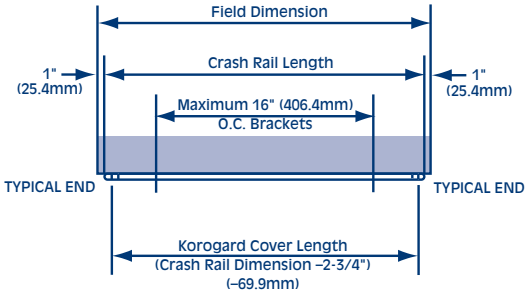

TYPICAL STRAIGHT LENGTH

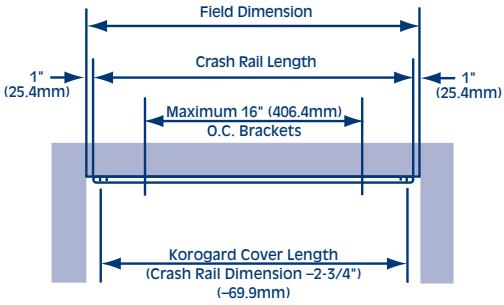

TYPICAL STRAIGHT LENGTH WITH TYPICAL ENDS

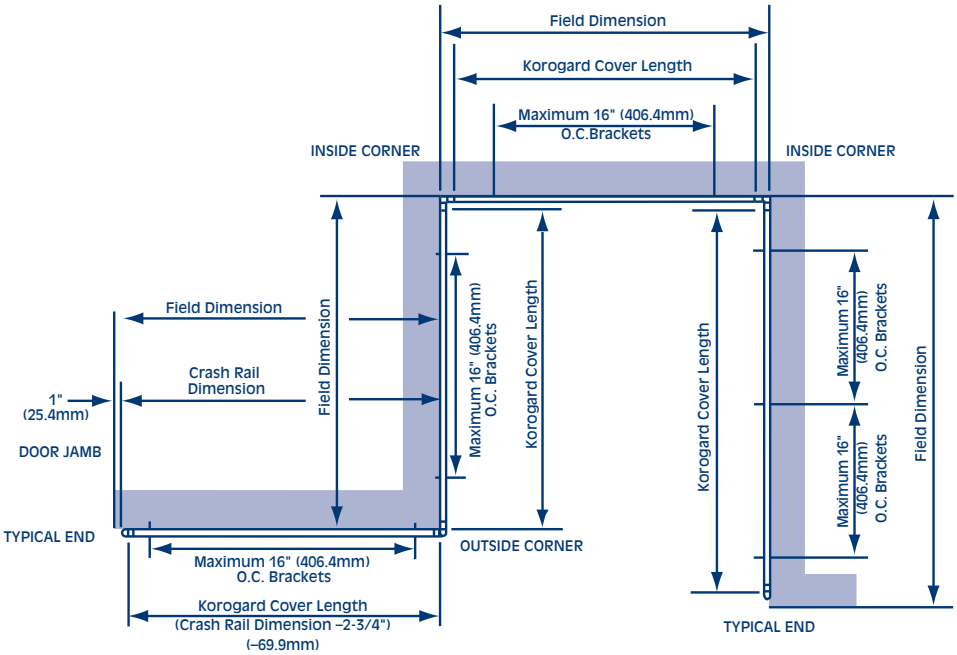

KOROGARD®
WALL PROTECTION SYSTEMS

800-628-0449 • www.korogard.com • Division 10 26 00

2588IC86I21
11-04

® is a registered trademark of RJF International Corporation.